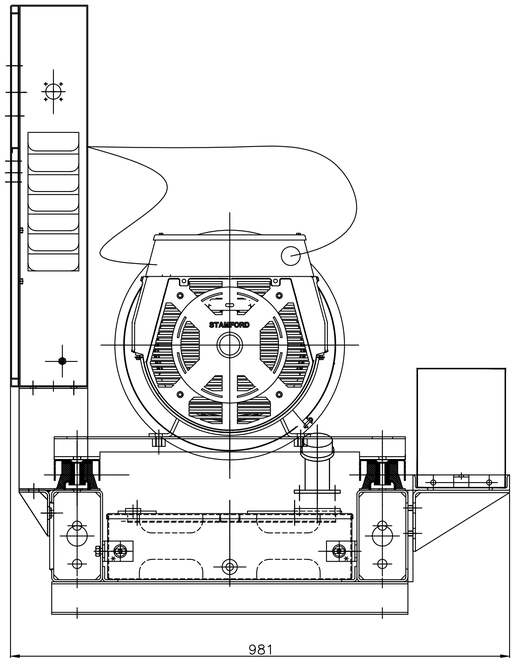

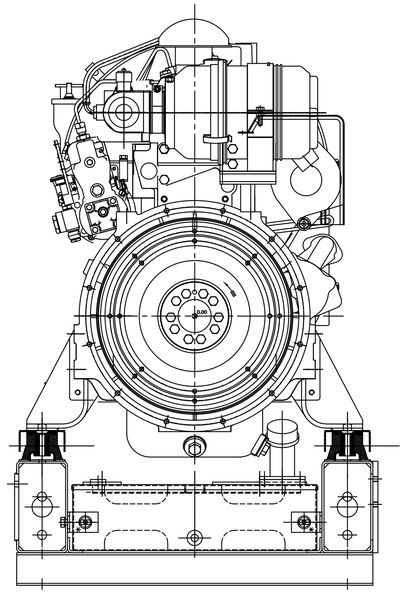

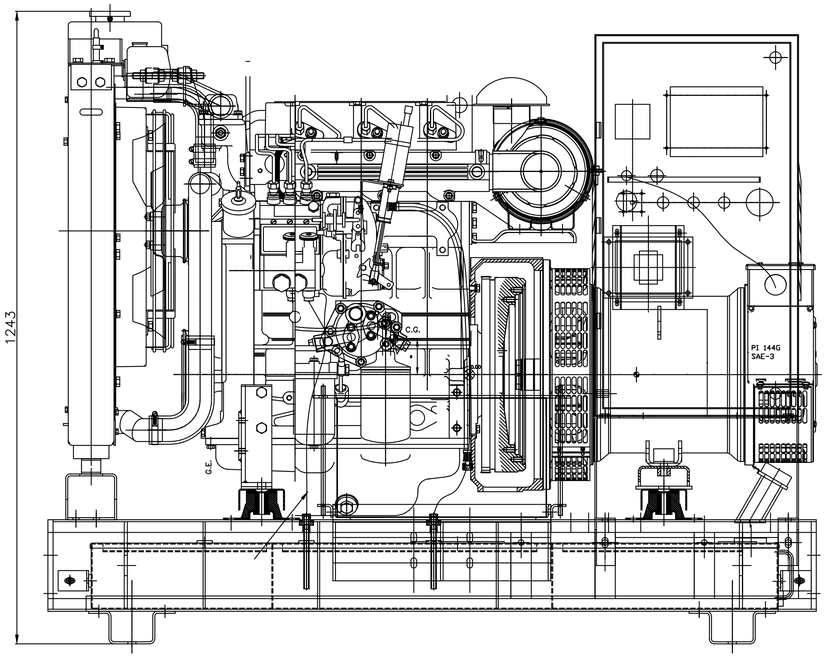

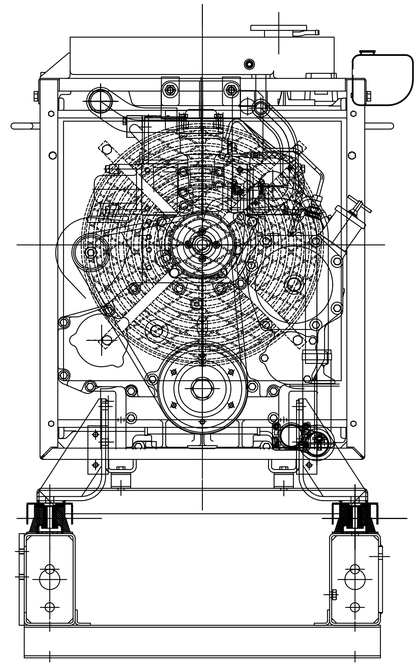

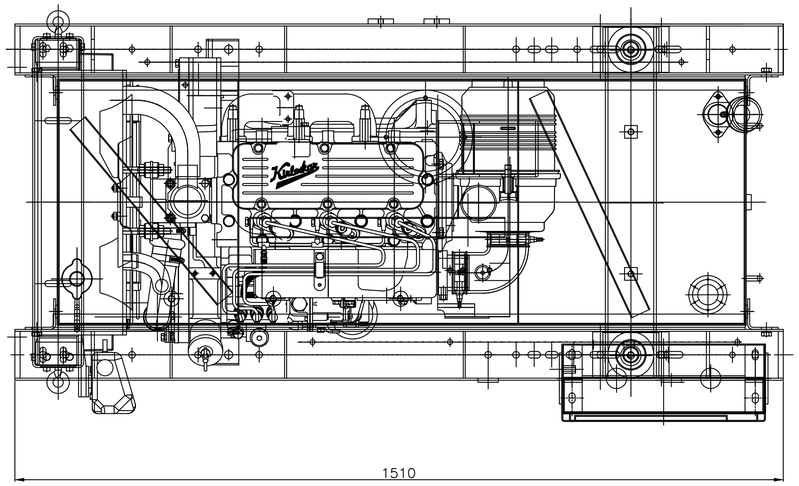

IF IN DOUBT ASK

PRINTS OF PREVIOUS REVISION NO. SHOULD BE SCRAPPED

THIS DRAWING IS PROPERTY OF KIRLOSKAR OIL ENGINES LTD. AND MUST BE RETURNED ON REQUEST.IT IS SUBMITTED AS CONFIDENTIAL INFORMATION WITH OUR ENQUIRY, TENDER, ORDER OR CONTRACT NO. IT IS NOT TO BE ISSUED FOR ANY OTHER PURPOSE OR ORDER NOR MAY BE COPIED OR LENT WITHOUT OUR AUTHORITY IN WRITING.

FORMAT No.R&E/FORM/056/01 (REFER DOP No R&E 4.4/03)

No.	REVISION	ZONE	MODIFIED BY	REF. No. DATE
00	NEW RELEASE.			– –

UNLESS OTHERWISE SPECIFIED
- ALL DIMENSIONS ARE IN mm.
- SURFACE ROUGHNESS AS PER CO. STD.NO.10501.
- UNMENTIONED TOLERANCES AS PER CO.STD.NO.11001.
- REMOVE ALL SHARP BURRS AND SHARP EDGES.
- DRAWING NOT TO BE SCALED.

UNMENTIONED	
RADII	–
CHAMFER	–
UNDERCUT	–

CAD DRG. FILE:- PLM

MATERIAL :-	HEAT TREATMENT :-	WEIGHT :-
–	–	–

DRN	DAVINCI
CHD.	
APPD.	
DATE	19/09/07

TITLE: INSTALLATION OF 3R1040 STD GENSET OPEN SET

KIRLOSKAR OIL ENGINES LTD., PUNE 411 003 (INDIA)

CASTING/FORGING DRG. NO. –

TYPE 3R1040

SCALE 1: 6

SHT. NO 1 OF 1

DRAWING NO.

SIZE A1